Buy IGCSE, O / A Level Books, Past Papers & Revision Notes Online at Discounted Prices across Pakistan
Visit: www.TeachifyMe.com / Shop Call / WhatsApp: (0331-9977798)

Cambridge International AS & A Level

Cambridge Assessment International Education
Cambridge International Advanced Subsidiary and Advanced Level

CANDIDATE NAME

CENTRE NUMBER

CANDIDATE NUMBER

3117579859

MATHEMATICS **9709/13**

Paper 1 Pure Mathematics 1 **(P1)** **October/November 2019**

1 hour 45 minutes

Candidates answer on the Question Paper.

Additional Materials: List of Formulae (MF9)

READ THESE INSTRUCTIONS FIRST

Write your centre number, candidate number and name in the spaces at the top of this page.
Write in dark blue or black pen.
You may use an HB pencil for any diagrams or graphs.
Do not use staples, paper clips, glue or correction fluid.
DO **NOT** WRITE IN ANY BARCODES.

Answer **all** the questions in the space provided. If additional space is required, you should use the lined page at the end of this booklet. The question number(s) must be clearly shown.
Give non-exact numerical answers correct to 3 significant figures, or 1 decimal place in the case of angles in degrees, unless a different level of accuracy is specified in the question.
The use of an electronic calculator is expected, where appropriate.
You are reminded of the need for clear presentation in your answers.

At the end of the examination, fasten all your work securely together.
The number of marks is given in brackets [ ] at the end of each question or part question.
The total number of marks for this paper is 75.

This document consists of **20** printed pages.

© UCLES 2019

Buy IGCSE, O / A Level Books, Past Papers & Revision Notes Online at Discounted Prices across Pakistan
Visit: www.TeachifyMe.com / Shop Call / WhatsApp: (0331-9977798)

1 **(i)** Expand $(1 + y)^6$ in ascending powers of y as far as the term in y^2. [1]

.....

.....

.....

.....

.....

(ii) In the expansion of $\left(1 + (px - 2x^2)\right)^6$ the coefficient of x^2 is 48. Find the value of the positive constant p. [3]

.....

.....

.....

.....

.....

.....

.....

.....

.....

.....

.....

.....

.....

.....

.....

.....

.....

.....

Buy IGCSE, O / A Level Books, Past Papers & Revision Notes Online at Discounted Prices across Pakistan
Visit: www.TeachifyMe.com / Shop Call / WhatsApp: (0331-9977798)

2 The function g is defined by $g(x) = x^2 - 6x + 7$ for $x > 4$. By first completing the square, find an expression for $g^{-1}(x)$ and state the domain of g^{-1}. [5]

Buy IGCSE, O / A Level Books, Past Papers & Revision Notes Online at Discounted Prices across Pakistan
Visit: www.TeachifyMe.com / Shop Call / WhatsApp: (0331-9977798)

3 The equation of a curve is $y = x^3 + x^2 - 8x + 7$. The curve has no stationary points in the interval $a < x < b$. Find the least possible value of a and the greatest possible value of b. [4]

Buy IGCSE, O / A Level Books, Past Papers & Revision Notes Online at Discounted Prices across Pakistan
Visit: www.TeachifyMe.com / Shop Call / WhatsApp: (0331-9977798)

4

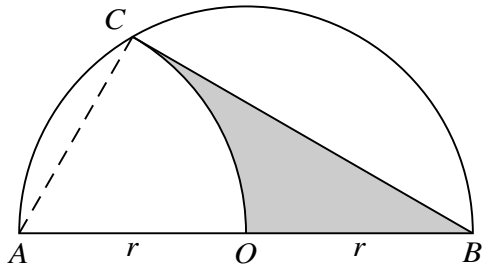

The diagram shows a semicircle ACB with centre O and radius r. Arc OC is part of a circle with centre A.

(i) Express angle CAO in radians in terms of π. [1]

.....

.....

.....

(ii) Find the area of the shaded region in terms of r, π and $\sqrt{3}$, simplifying your answer. [4]

.....

.....

.....

.....

.....

.....

.....

.....

.....

.....

.....

.....

.....

.....

.....

Buy IGCSE, O / A Level Books, Past Papers & Revision Notes Online at Discounted Prices across Pakistan
Visit: www.TeachifyMe.com / Shop Call / WhatsApp: (0331-9977798)

5

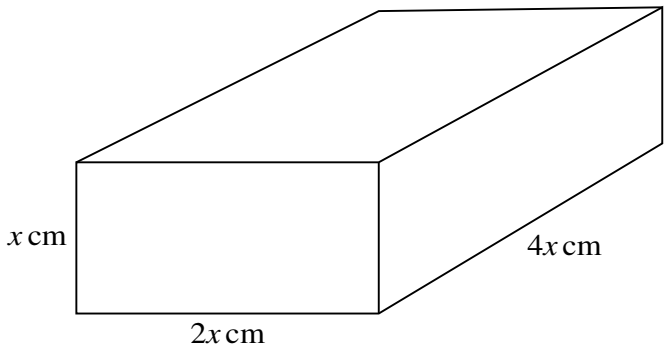

The dimensions of a cuboid are x cm, $2x$ cm and $4x$ cm, as shown in the diagram.

(i) Show that the surface area S cm^2 and the volume V cm^3 are connected by the relation

$$S = 7V^{\frac{2}{3}}.$$ [3]

.....

.....

.....

.....

.....

.....

.....

.....

.....

.....

.....

.....

.....

.....

.....

.....

.....

Buy IGCSE, O / A Level Books, Past Papers & Revision Notes Online at Discounted Prices across Pakistan
Visit: www.TeachifyMe.com / Shop Call / WhatsApp: (0331-9977798)

(ii) When the volume of the cuboid is $1000\,\text{cm}^3$ the surface area is increasing at $2\,\text{cm}^2\,\text{s}^{-1}$. Find the rate of increase of the volume at this instant. [4]

.....

.....

.....

.....

.....

.....

.....

.....

.....

.....

.....

.....

.....

.....

.....

.....

.....

.....

.....

.....

.....

.....

.....

.....

.....

Buy IGCSE, O / A Level Books, Past Papers & Revision Notes Online at Discounted Prices across Pakistan
Visit: www.TeachifyMe.com / Shop Call / WhatsApp: (0331-9977798)

6 A line has equation $y = 3kx - 2k$ and a curve has equation $y = x^2 - kx + 2$, where k is a constant.

(i) Find the set of values of k for which the line and curve meet at two distinct points. [4]

Buy IGCSE, O / A Level Books, Past Papers & Revision Notes Online at Discounted Prices across Pakistan
Visit: www.TeachifyMe.com / Shop Call / WhatsApp: (0331-9977798)

(ii) For each of two particular values of k, the line is a tangent to the curve. Show that these two tangents meet on the x-axis. [3]

Buy IGCSE, O / A Level Books, Past Papers & Revision Notes Online at Discounted Prices across Pakistan
Visit: www.TeachifyMe.com / Shop Call / WhatsApp: (0331-9977798)

7 **(i)** Show that the equation $3\cos^4\theta + 4\sin^2\theta - 3 = 0$ can be expressed as $3x^2 - 4x + 1 = 0$, where $x = \cos^2\theta$. [2]

Buy IGCSE, O / A Level Books, Past Papers & Revision Notes Online at Discounted Prices across Pakistan
Visit: www.TeachifyMe.com / Shop Call / WhatsApp: (0331-9977798)

(ii) Hence solve the equation $3\cos^4\theta + 4\sin^2\theta - 3 = 0$ for $0° \leqslant \theta \leqslant 180°$. [5]

Buy IGCSE, O / A Level Books, Past Papers & Revision Notes Online at Discounted Prices across Pakistan
Visit: www.TeachifyMe.com / Shop Call / WhatsApp: (0331-9977798)

8 A function f is defined for $x > \frac{1}{2}$ and is such that $f'(x) = 3(2x - 1)^{\frac{1}{2}} - 6$.

(i) Find the set of values of x for which f is decreasing. [4]

Buy IGCSE, O / A Level Books, Past Papers & Revision Notes Online at Discounted Prices across Pakistan
Visit: www.TeachifyMe.com / Shop Call / WhatsApp: (0331-9977798)

(ii) It is now given that $f(1) = -3$. Find $f(x)$. [4]

Buy IGCSE, O / A Level Books, Past Papers & Revision Notes Online at Discounted Prices across Pakistan
Visit: www.TeachifyMe.com / Shop Call / WhatsApp: (0331-9977798)

9 The first, second and third terms of a geometric progression are $3k$, $5k - 6$ and $6k - 4$, respectively.

(i) Show that k satisfies the equation $7k^2 - 48k + 36 = 0$. [2]

.....

.....

.....

.....

.....

.....

.....

.....

.....

.....

.....

(ii) Find, showing all necessary working, the exact values of the common ratio corresponding to each of the possible values of k. [4]

.....

.....

.....

.....

.....

.....

.....

.....

.....

.....

.....

Buy IGCSE, O / A Level Books, Past Papers & Revision Notes Online at Discounted Prices across Pakistan
Visit: www.TeachifyMe.com / Shop Call / WhatsApp: (0331-9977798)

.....

.....

.....

.....

.....

.....

.....

.....

.....

.....

.....

.....

(iii) One of these ratios gives a progression which is convergent. Find the sum to infinity. [2]

.....

.....

.....

.....

.....

.....

.....

.....

.....

.....

.....

.....

Buy IGCSE, O / A Level Books, Past Papers & Revision Notes Online at Discounted Prices across Pakistan
Visit: www.TeachifyMe.com / Shop Call / WhatsApp: (0331-9977798)

10 Relative to an origin O, the position vectors of the points A, B and X are given by

$$\overrightarrow{OA} = \begin{pmatrix} -8 \\ -4 \\ 2 \end{pmatrix}, \quad \overrightarrow{OB} = \begin{pmatrix} 10 \\ 2 \\ 11 \end{pmatrix} \quad \text{and} \quad \overrightarrow{OX} = \begin{pmatrix} -2 \\ -2 \\ 5 \end{pmatrix}.$$

(i) Find $\overrightarrow{AX}$ and show that AXB is a straight line. [3]

Buy IGCSE, O / A Level Books, Past Papers & Revision Notes Online at Discounted Prices across Pakistan
Visit: www.TeachifyMe.com / Shop Call / WhatsApp: (0331-9977798)

The position vector of a point C is given by $\overrightarrow{OC} = \begin{pmatrix} 1 \\ -8 \\ 3 \end{pmatrix}$.

(ii) Show that CX is perpendicular to AX. [3]

.....

.....

.....

.....

.....

.....

.....

.....

.....

.....

.....

(iii) Find the area of triangle ABC. [3]

.....

.....

.....

.....

.....

.....

.....

.....

.....

.....

.....

Buy IGCSE, O / A Level Books, Past Papers & Revision Notes Online at Discounted Prices across Pakistan
Visit: www.TeachifyMe.com / Shop Call / WhatsApp: (0331-9977798)

11

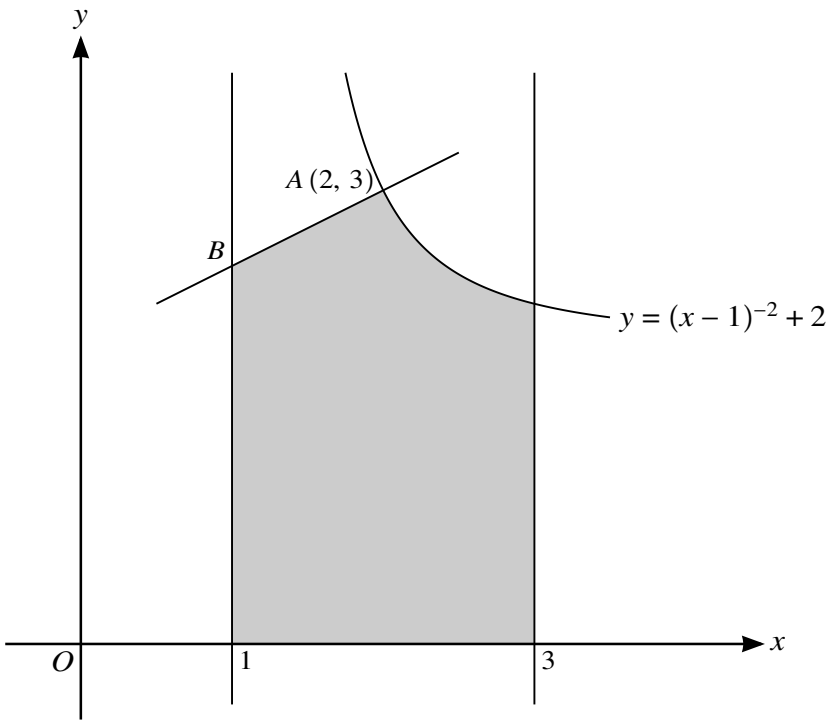

The diagram shows part of the curve $y = (x - 1)^{-2} + 2$, and the lines $x = 1$ and $x = 3$. The point A on the curve has coordinates $(2, 3)$. The normal to the curve at A crosses the line $x = 1$ at B.

(i) Show that the normal AB has equation $y = \frac{1}{2}x + 2$. [3]

.....

.....

.....

.....

.....

.....

.....

.....

.....

.....

.....

.....

.....

Buy IGCSE, O / A Level Books, Past Papers & Revision Notes Online at Discounted Prices across Pakistan
Visit: www.TeachifyMe.com / Shop Call / WhatsApp: (0331-9977798)

(ii) Find, showing all necessary working, the volume of revolution obtained when the shaded region is rotated through 360° about the x-axis. [8]

.....

.....

.....

.....

.....

.....

.....

.....

.....

.....

.....

.....

.....

.....

.....

.....

.....

.....

.....

.....

.....

.....

.....

.....

.....

Buy IGCSE, O / A Level Books, Past Papers & Revision Notes Online at Discounted Prices across Pakistan
Visit: www.TeachifyMe.com / Shop Call / WhatsApp: (0331-9977798)

Additional Page

If you use the following lined page to complete the answer(s) to any question(s), the question number(s) must be clearly shown.

.....

.....

.....

.....

.....

.....

.....

.....

.....

.....

.....

.....

.....

.....

.....

.....

.....

.....

.....

.....

.....

Permission to reproduce items where third-party owned material protected by copyright is included has been sought and cleared where possible. Every reasonable effort has been made by the publisher (UCLES) to trace copyright holders, but if any items requiring clearance have unwittingly been included, the publisher will be pleased to make amends at the earliest possible opportunity.

To avoid the issue of disclosure of answer-related information to candidates, all copyright acknowledgements are reproduced online in the Cambridge Assessment International Education Copyright Acknowledgements Booklet. This is produced for each series of examinations and is freely available to download at www.cambridgeinternational.org after the live examination series.

Cambridge Assessment International Education is part of the Cambridge Assessment Group. Cambridge Assessment is the brand name of the University of Cambridge Local Examinations Syndicate (UCLES), which itself is a department of the University of Cambridge.

© UCLES 2019